LEGO
BOSTON WORKPLACE TRANSITION
DUCK BOAT
WELCOME TO BOSTON
1001 BOYLSTON STREET
10+ | 6567037 | 150 pcs/pzs
Building Set
Ensemble de construction
Set de construcción
6 73419 41715 0
10+
BUILDING TOY
JOUET DE CONSTRUCTION
JUGUETE PARA CONSTRUIR

1

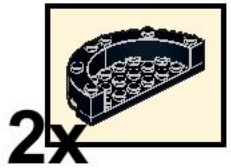

2

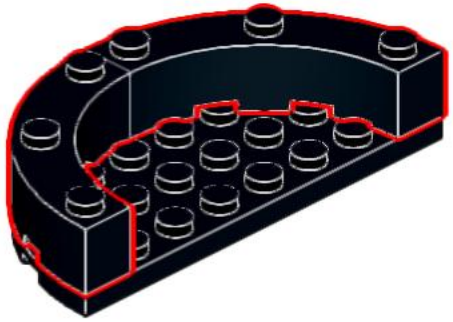

3

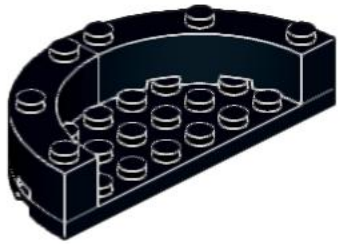

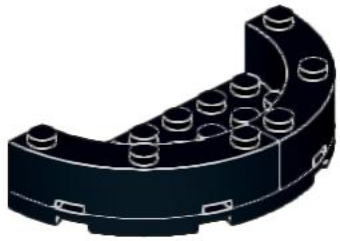

4

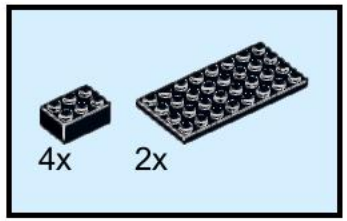

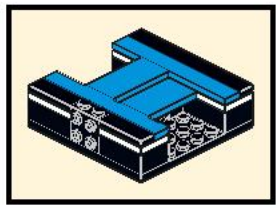

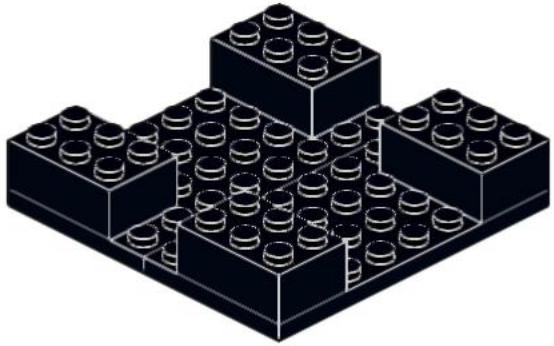

5

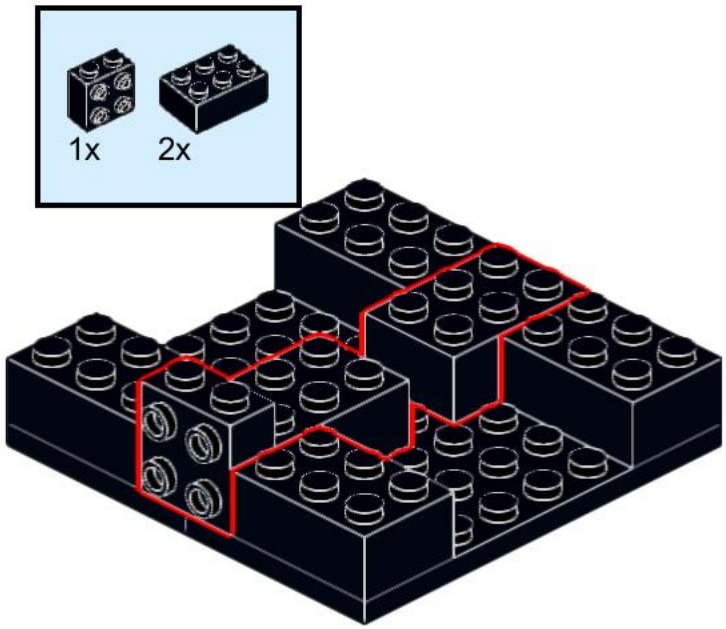

6

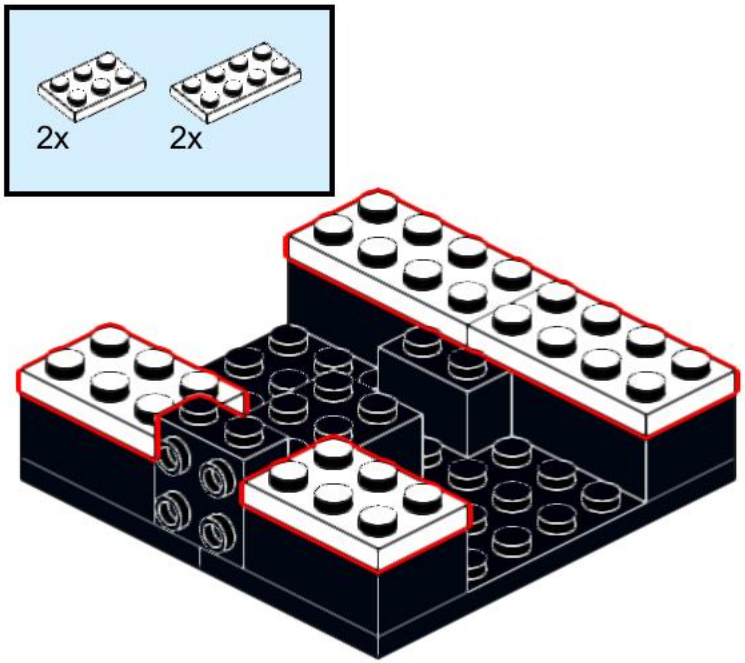

7

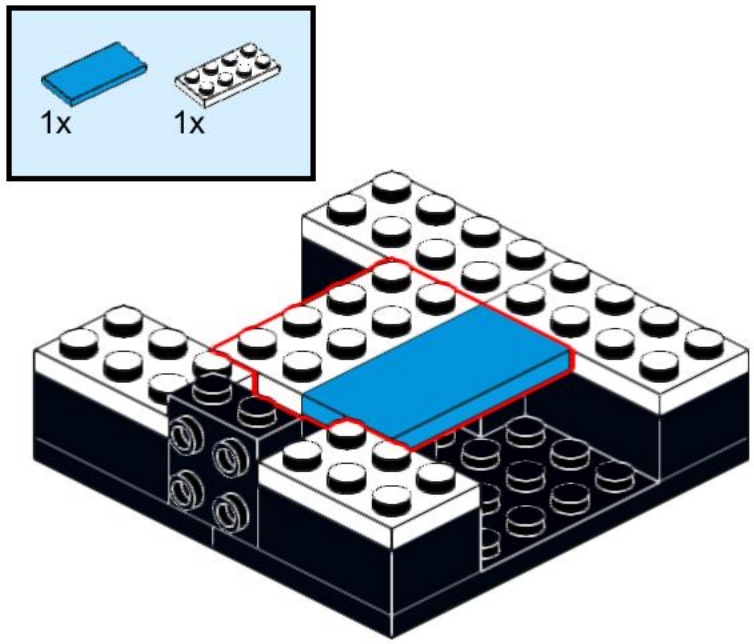

8

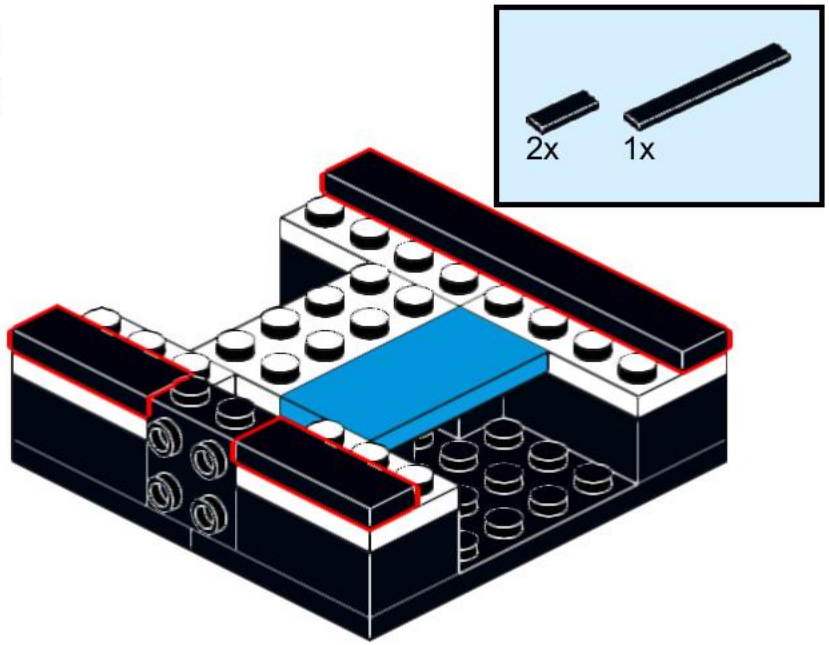

9

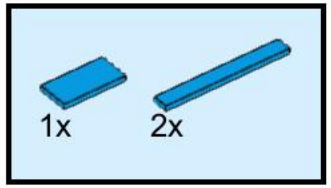

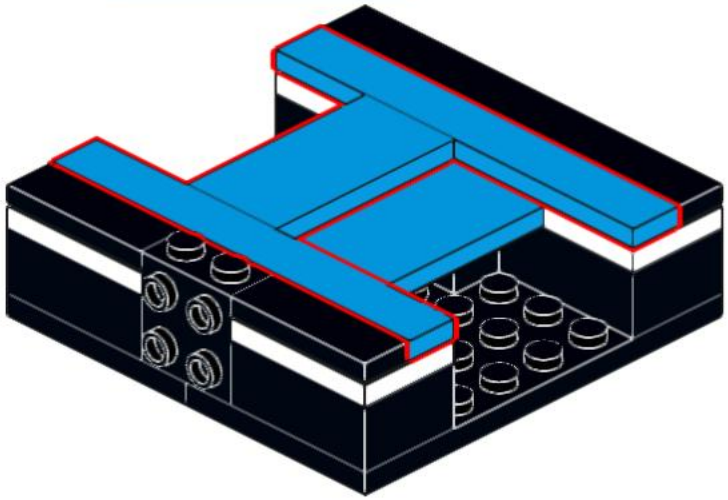

10

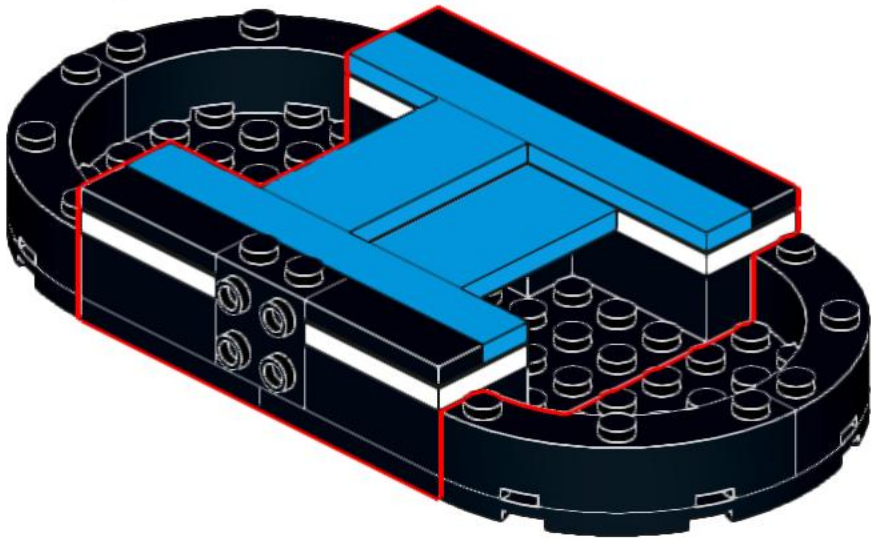

11

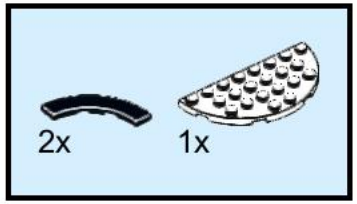

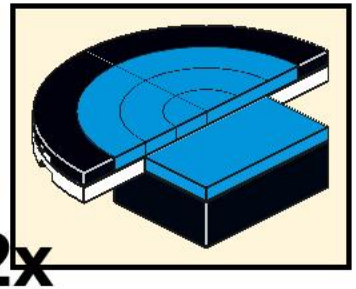

2x

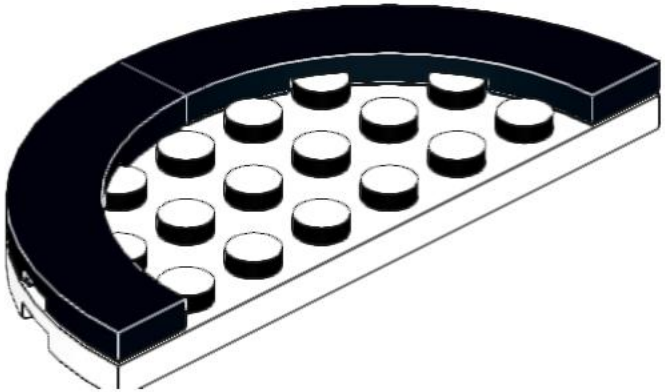

12

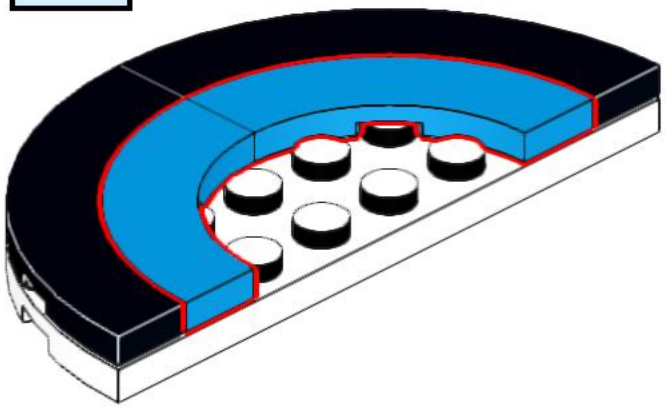

13

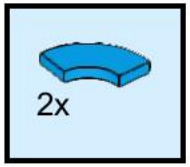

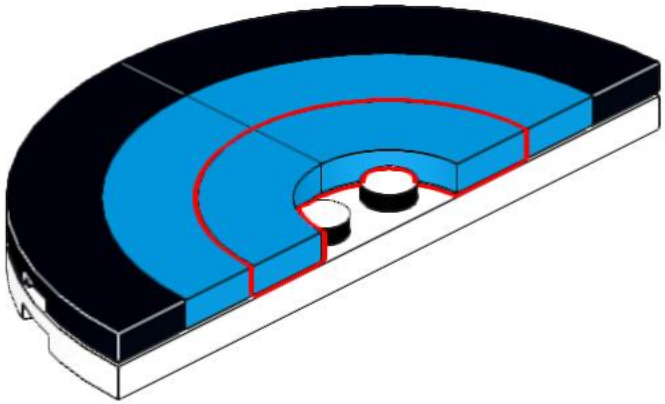

14

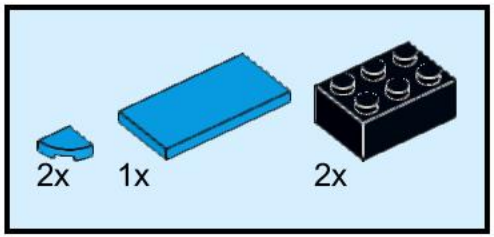

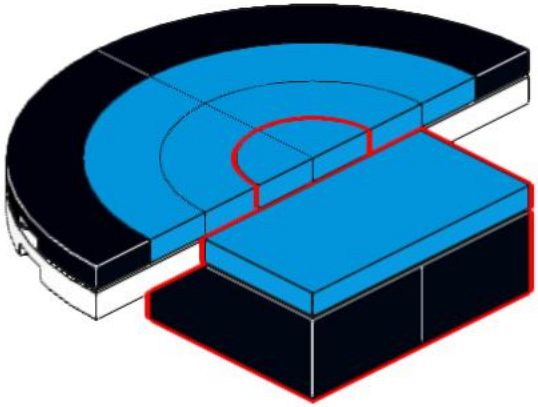

15

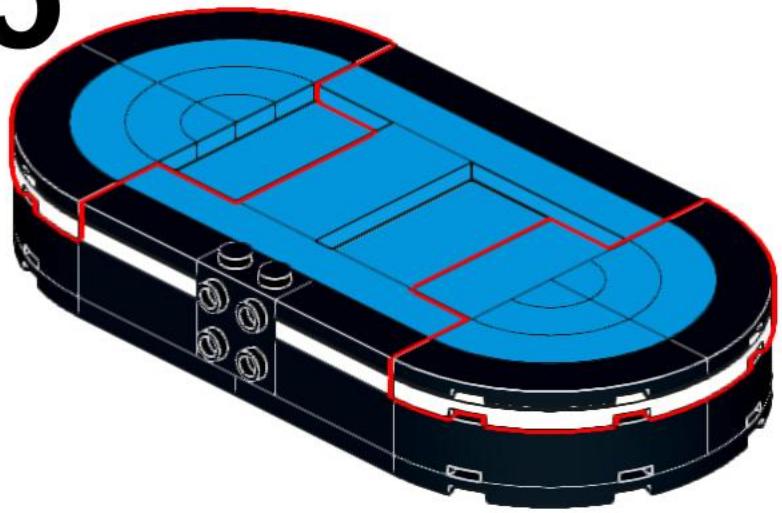

16

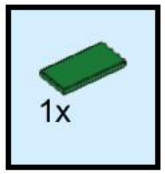

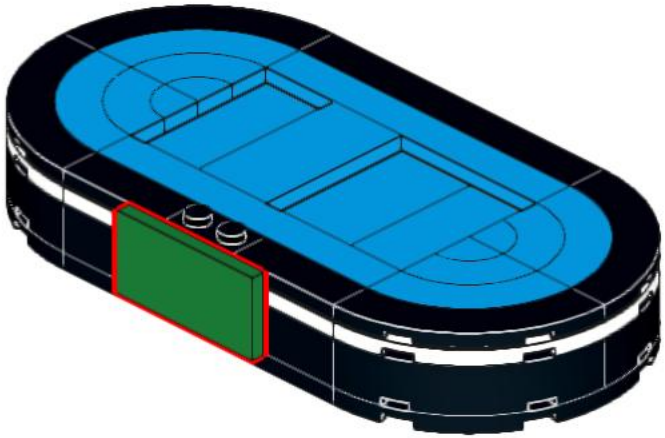

17

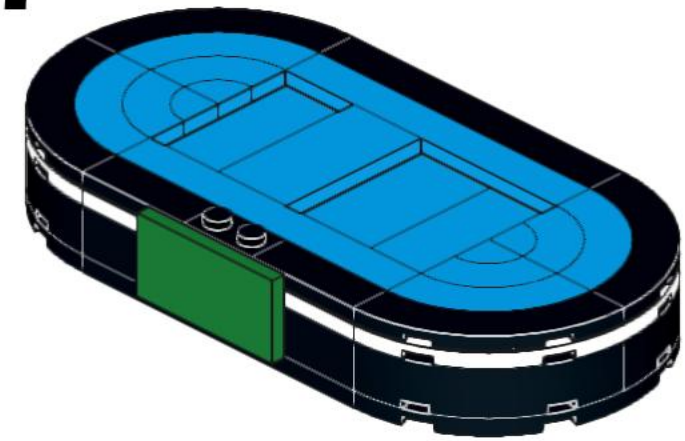

18

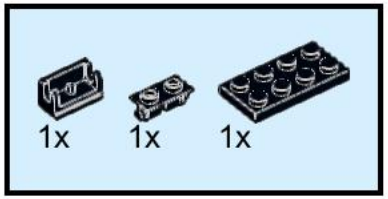

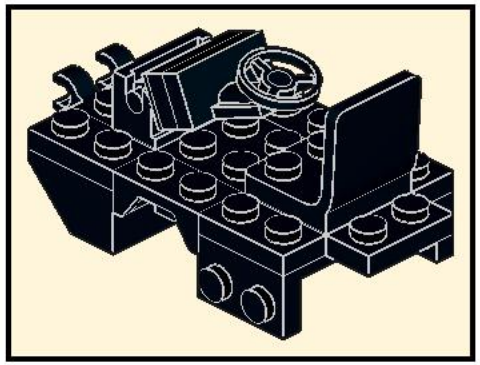

19

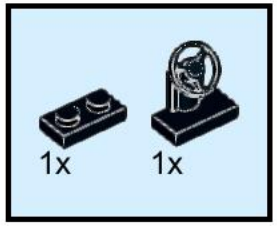

20

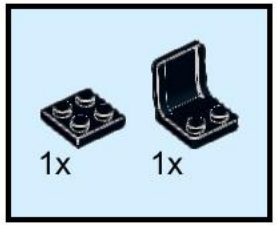

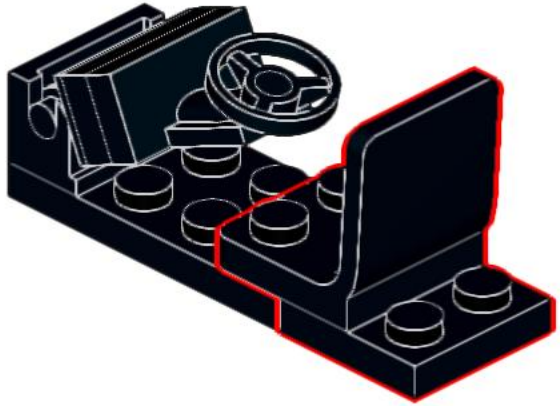

21

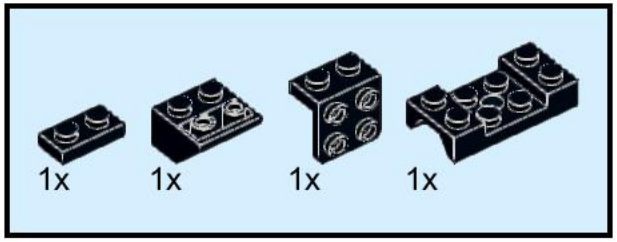

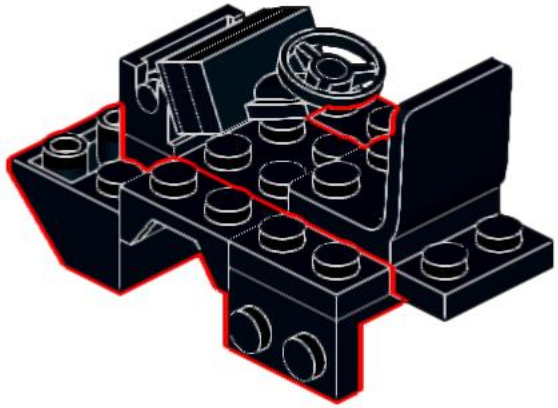

22

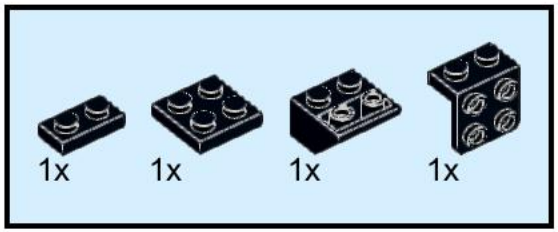

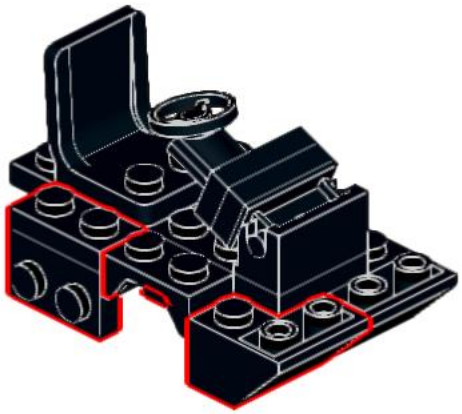

23

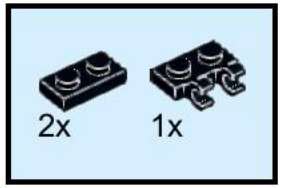

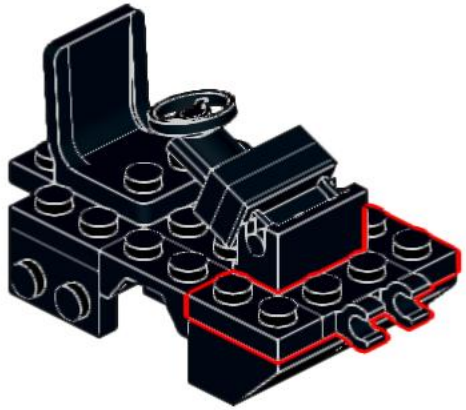

24

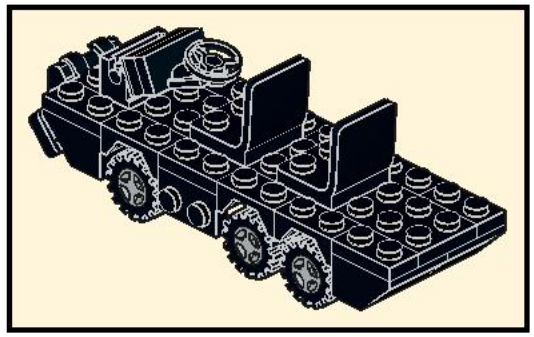

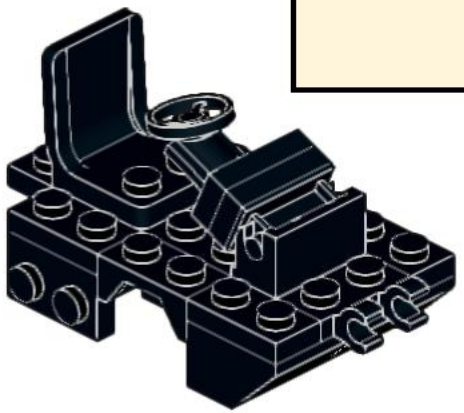

25

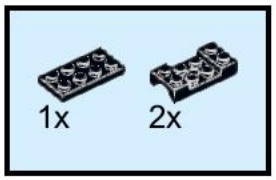

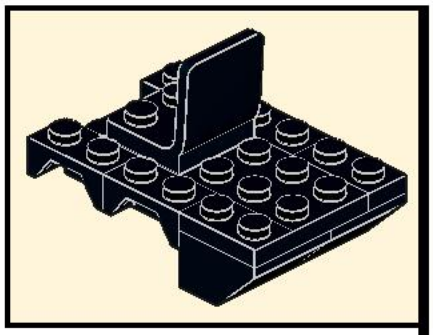

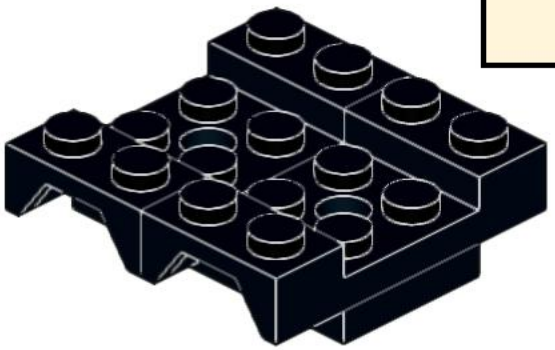

26

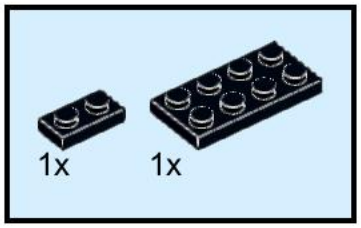

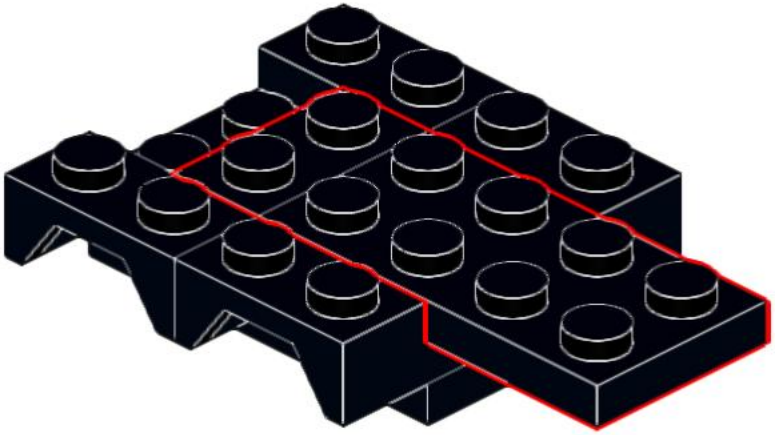

27

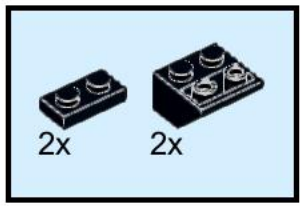

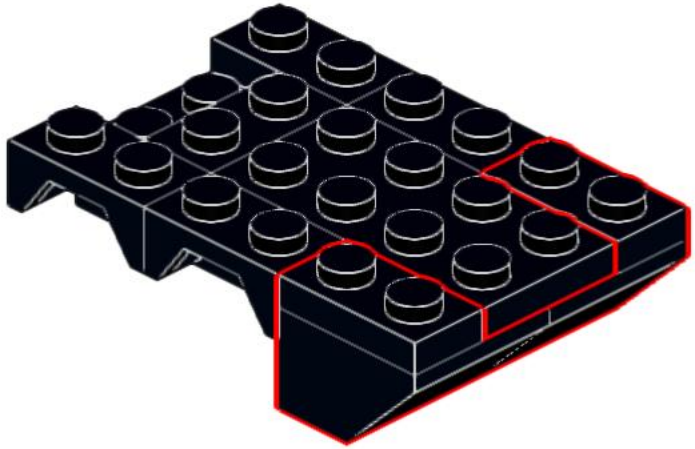

28

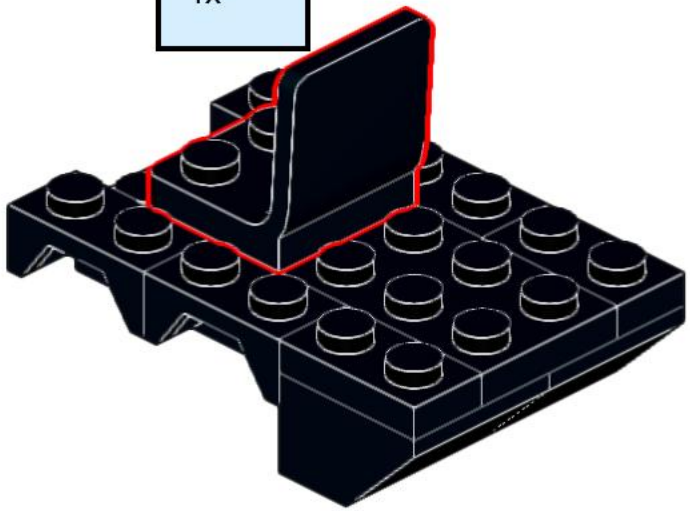

29

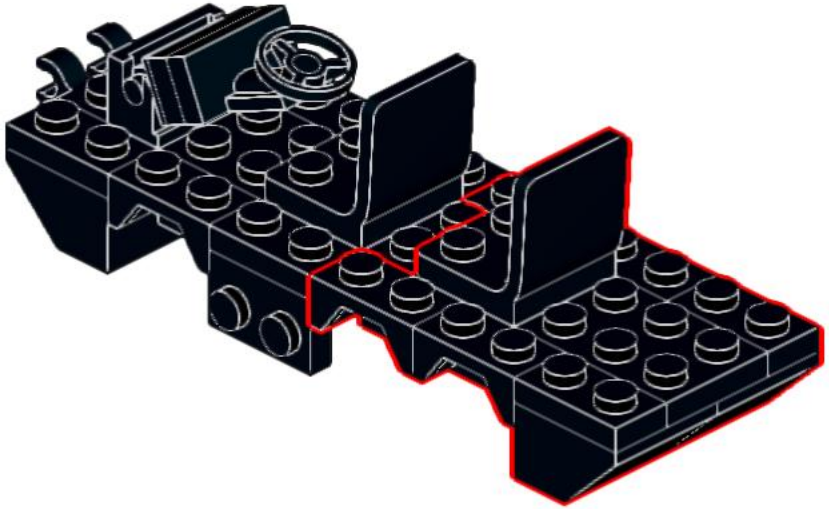

30

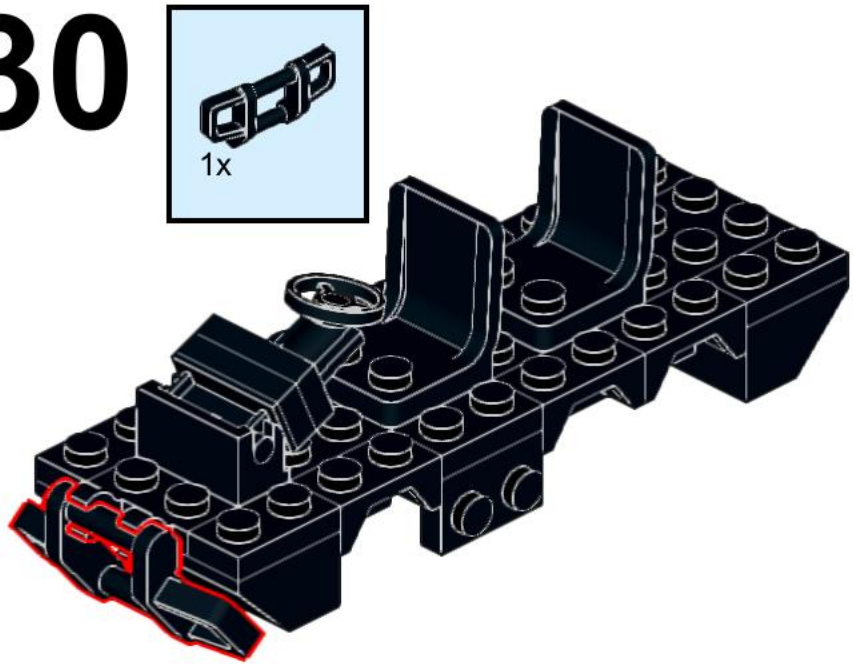

31

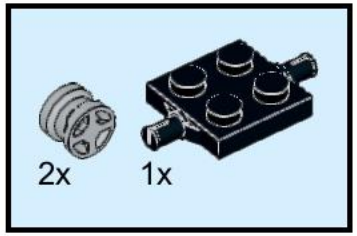

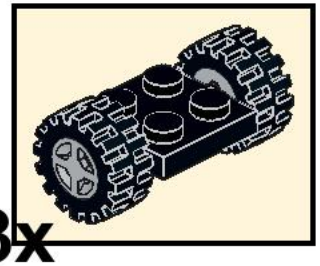

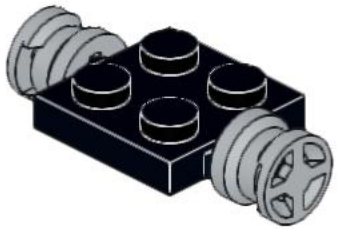

32

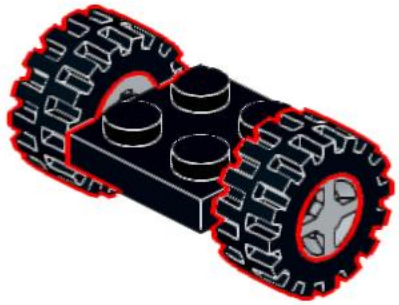

33

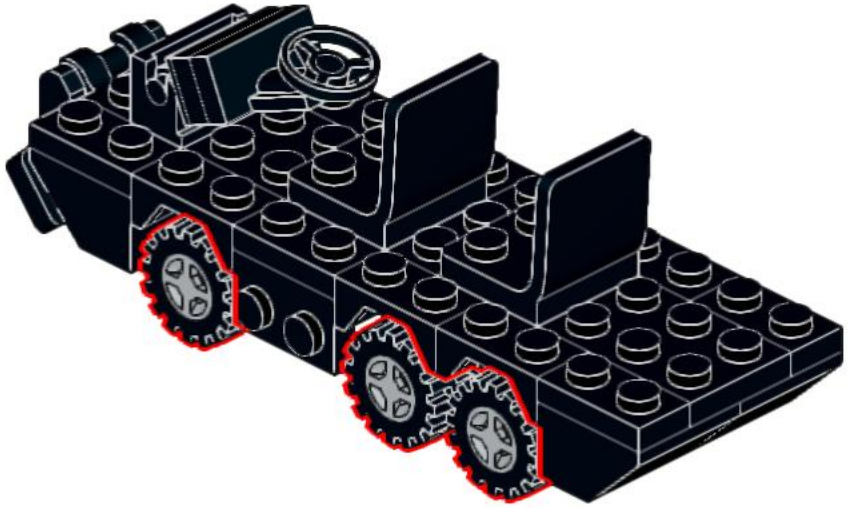

34

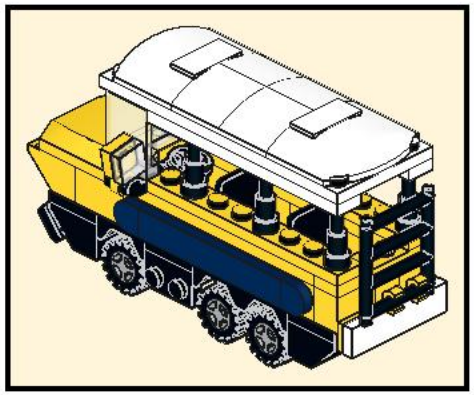

35

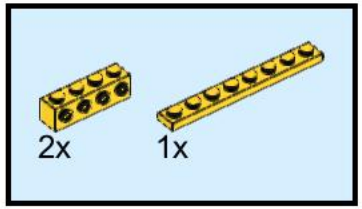

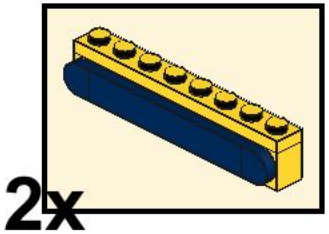

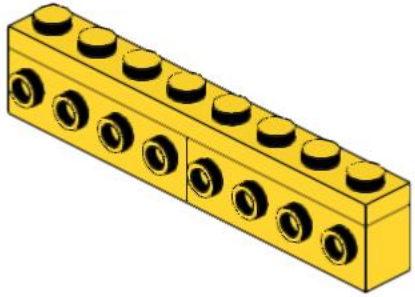

36

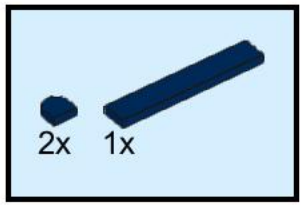

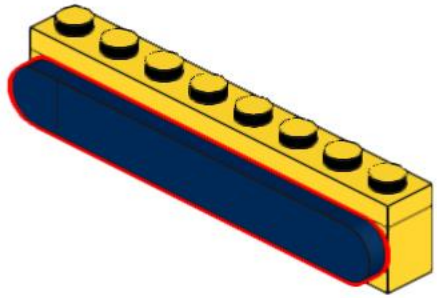

37

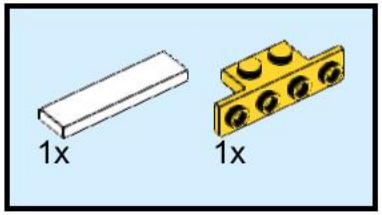

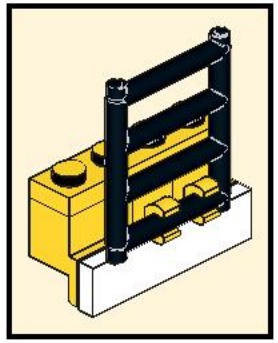

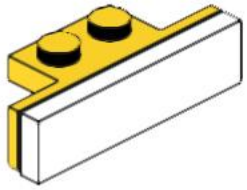

38

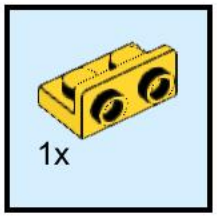

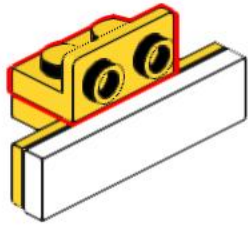

39

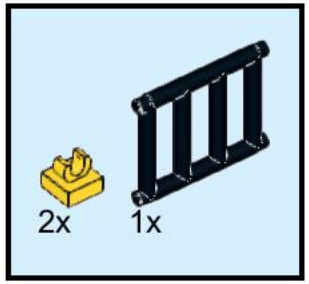

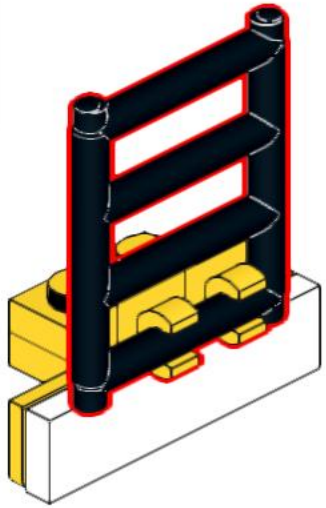

40

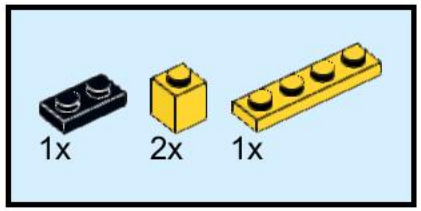

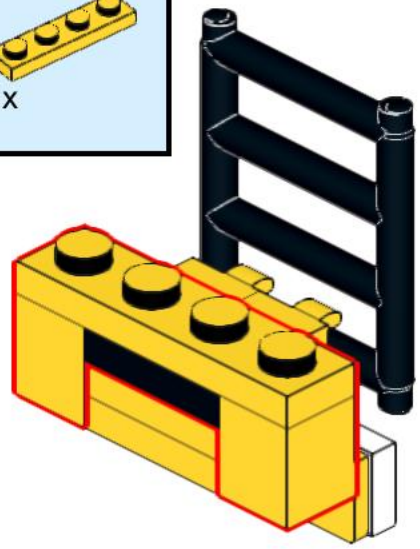

41

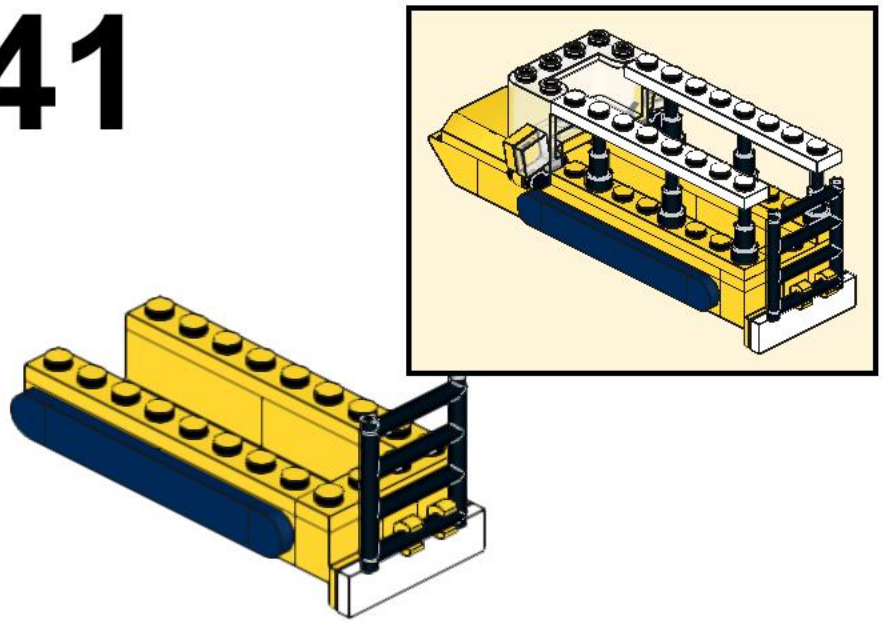

42

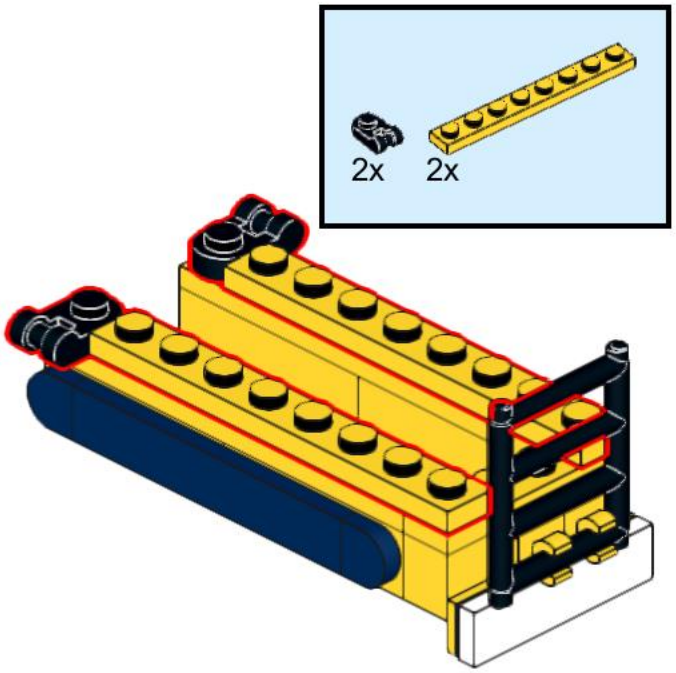

43

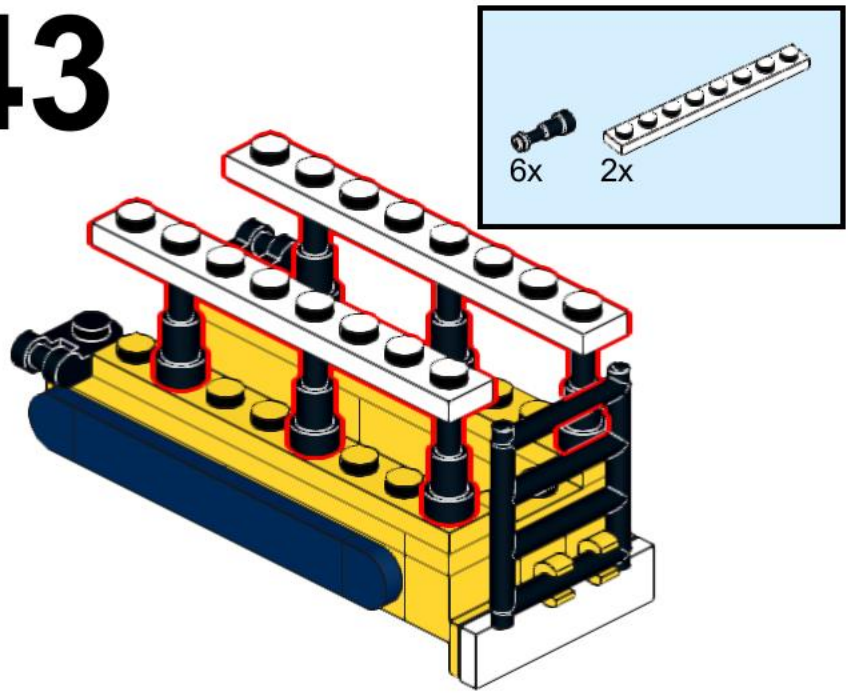

44

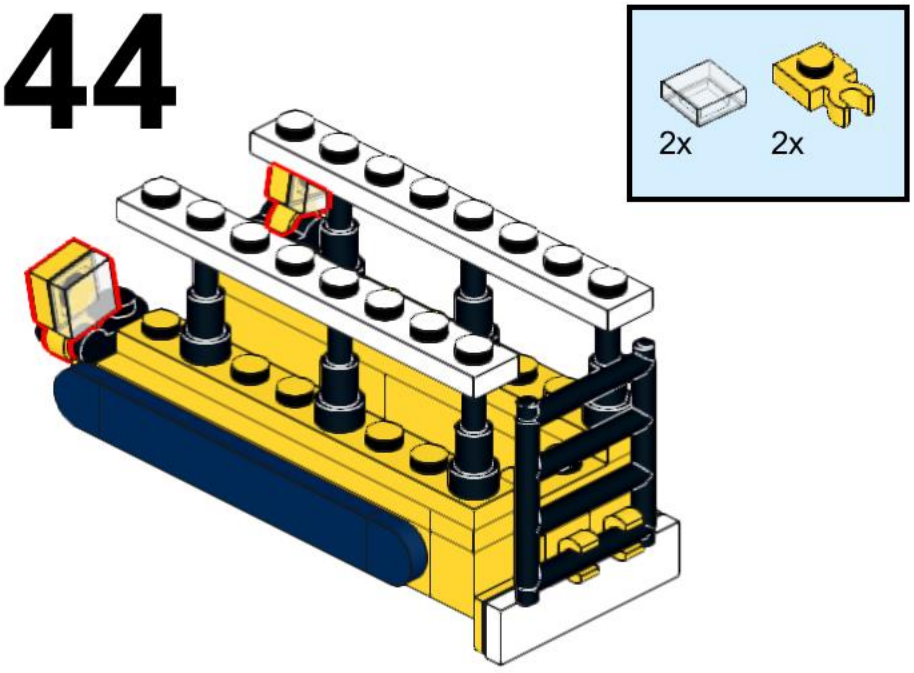

45

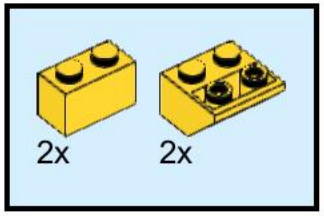

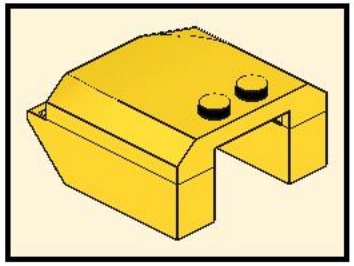

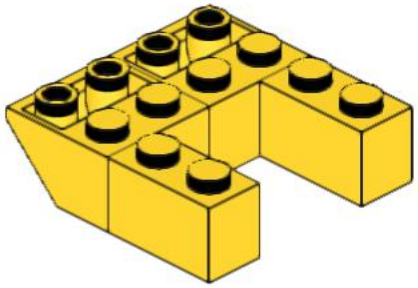

46

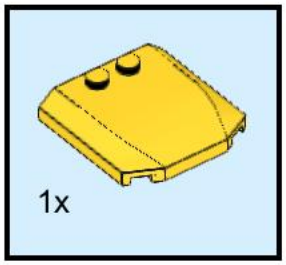

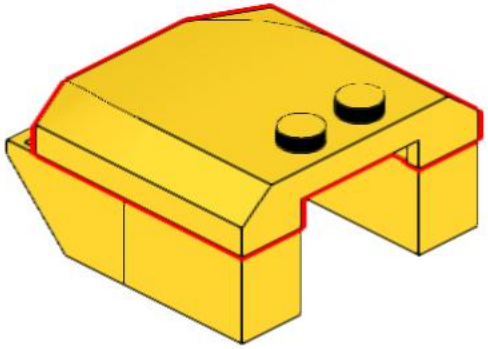

47

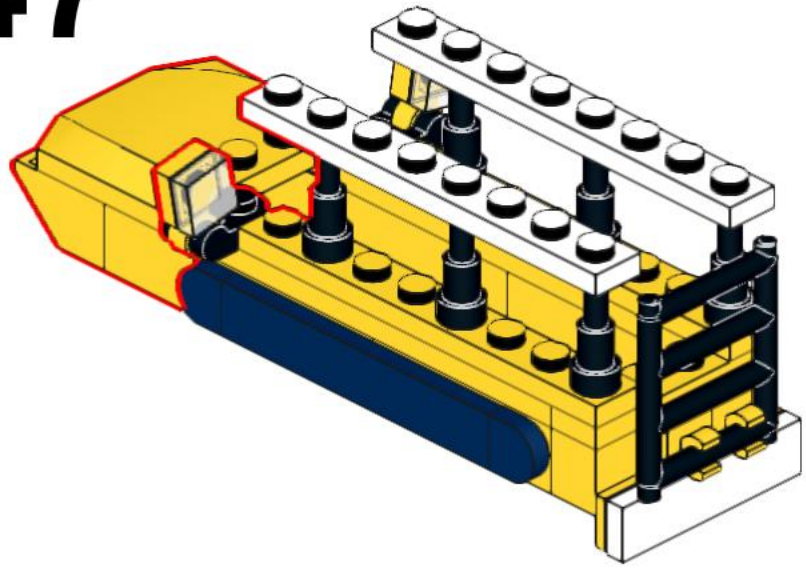

48

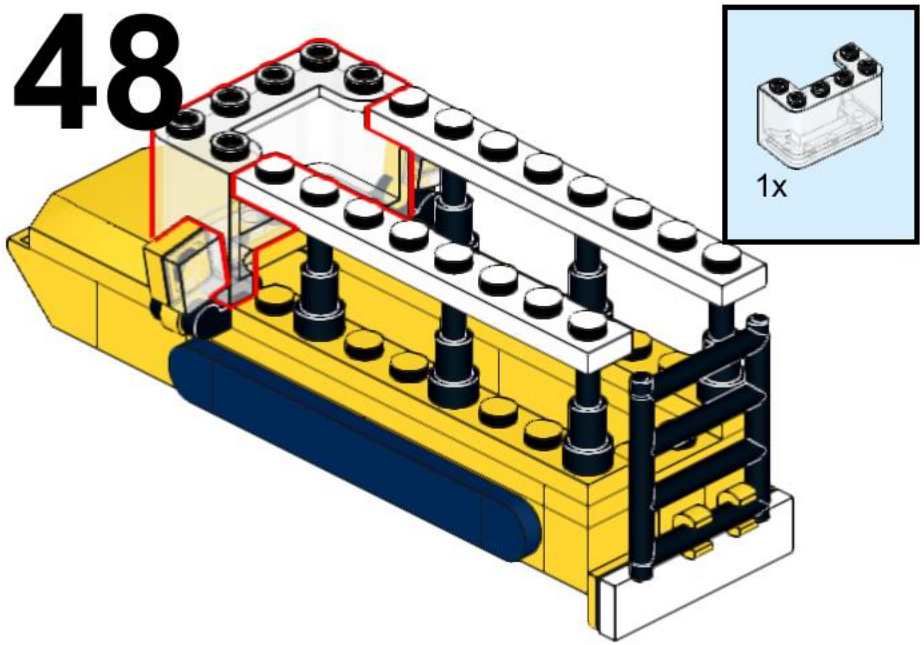

49

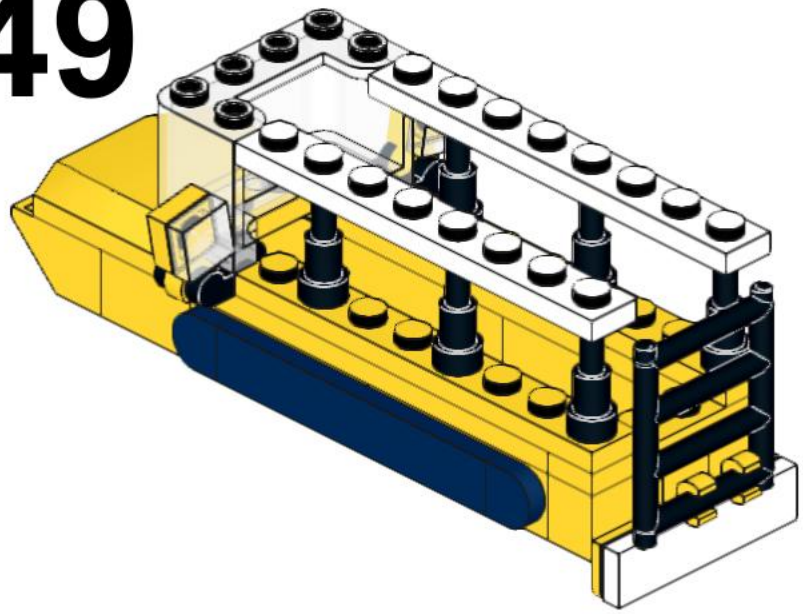

50

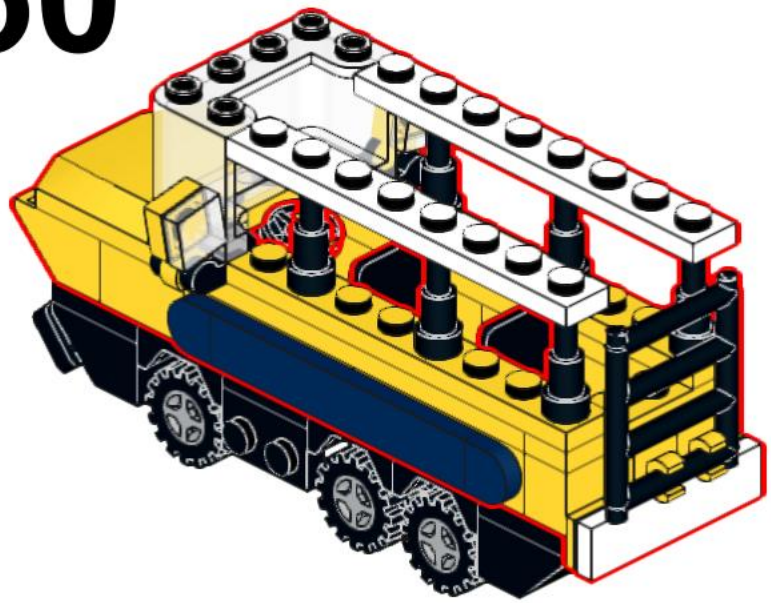

51

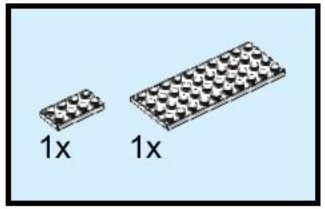

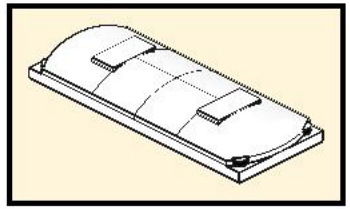

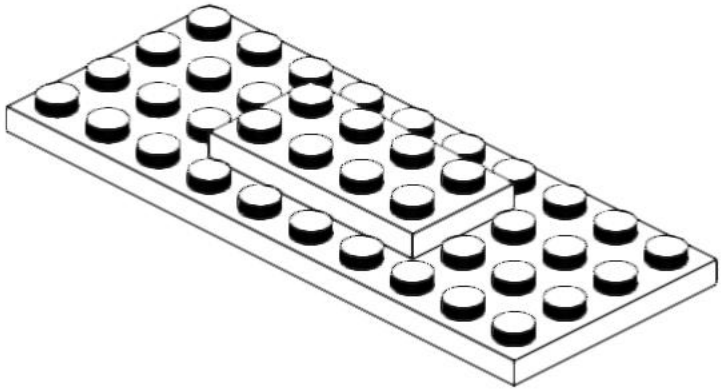

52

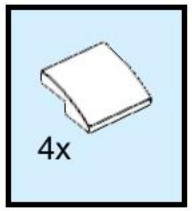

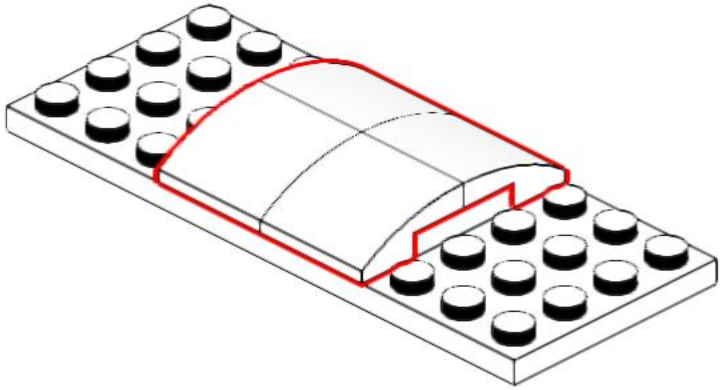

53

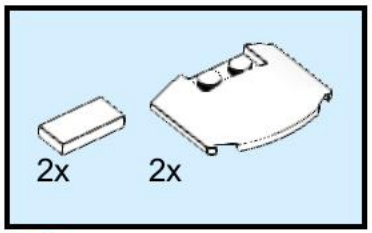

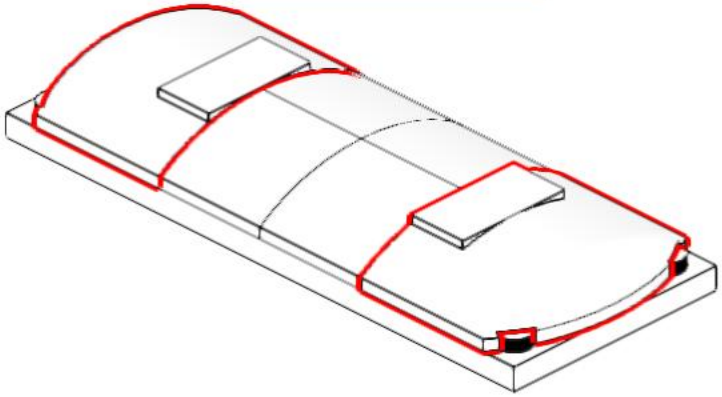

54

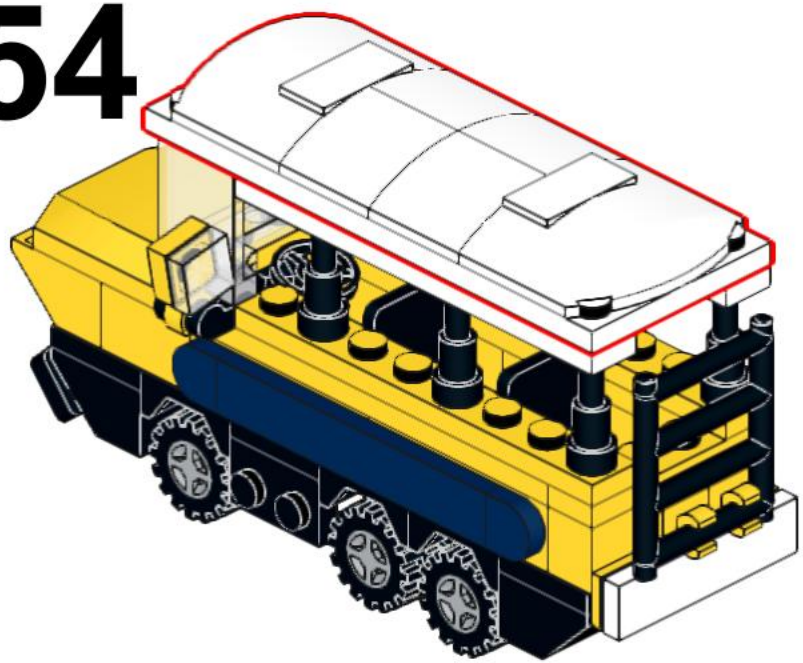

55

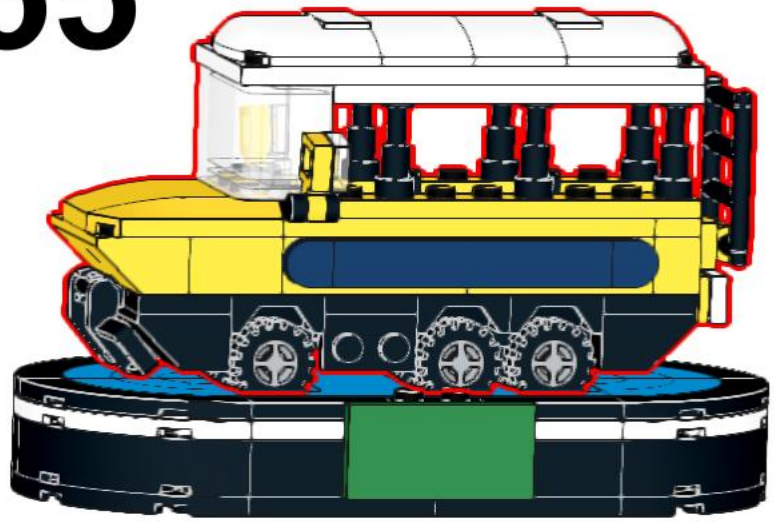

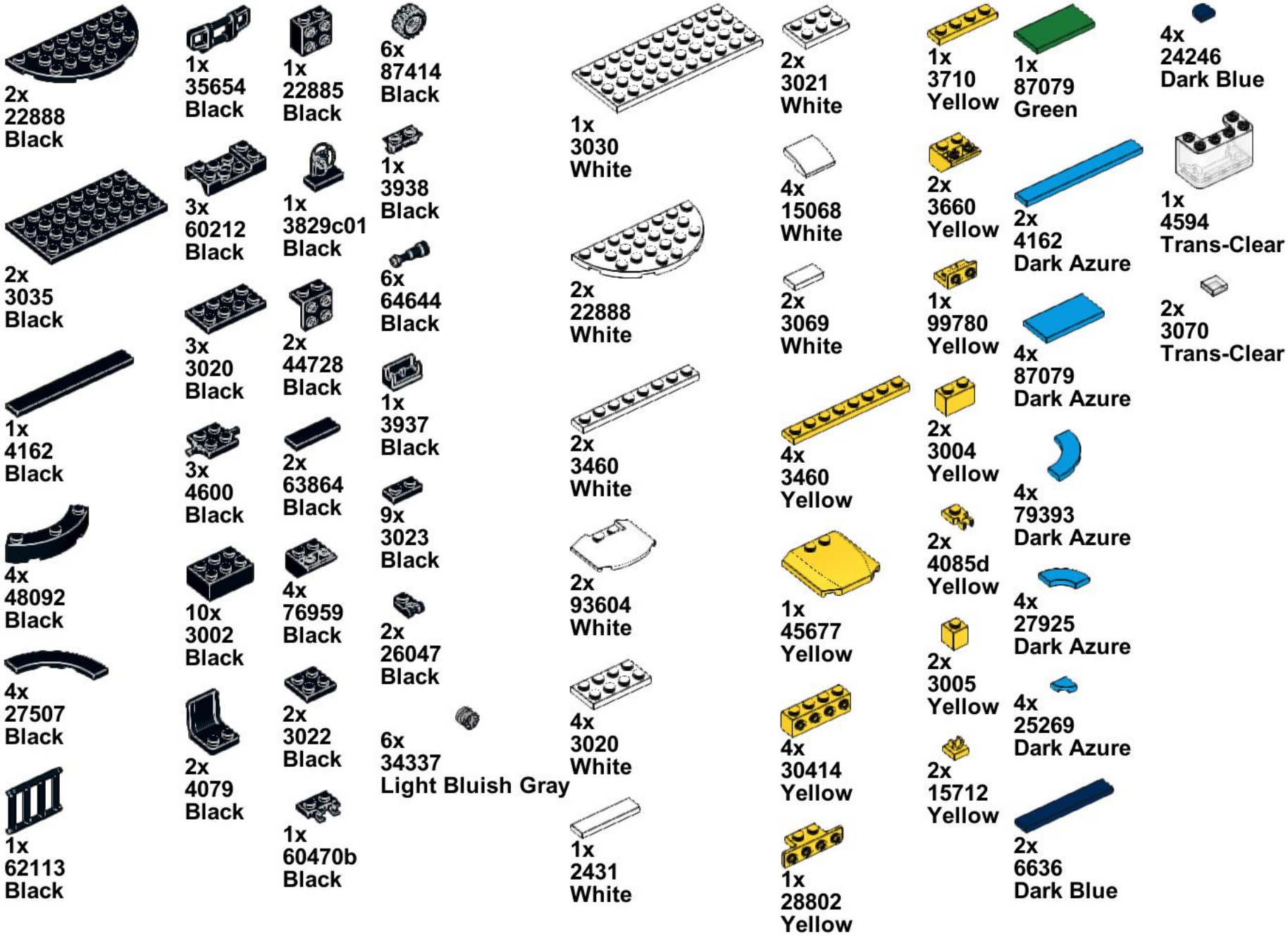
2x 22888 Black
2x 3035 Black
1x 4162 Black
4x 48092 Black
4x 27507 Black
1x 62113 Black
1x 35654 Black
3x 60212 Black
3x 3020 Black
3x 4600 Black
10x 3002 Black
2x 4079 Black
1x 22885 Black
1x 3829c01 Black
2x 44728 Black
2x 63864 Black
4x 76959 Black
2x 3022 Black
1x 60470b Black
6x 87414 Black
1x 3938 Black
6x 64644 Black
1x 3937 Black
9x 3023 Black
2x 26047 Black
6x 34337 Light Bluish Gray
1x 3030 White
2x 22888 White
2x 3460 White
2x 93604 White
4x 3020 White
1x 2431 White
2x 3021 White
4x 15068 White
2x 3069 White
4x 3460 Yellow
1x 45677 Yellow
4x 30414 Yellow
1x 28802 Yellow
1x 3710 Yellow
2x 3660 Yellow
1x 99780 Yellow
2x 3004 Yellow
2x 4085d Yellow
2x 3005 Yellow
2x 15712 Yellow
1x 87079 Green
2x 4162 Dark Azure
4x 87079 Dark Azure
4x 79393 Dark Azure
4x 27925 Dark Azure
4x 25269 Dark Azure
2x 6636 Dark Blue
4x 24246 Dark Blue
1x 4594 Trans-Clear
2x 3070 Trans-Clear